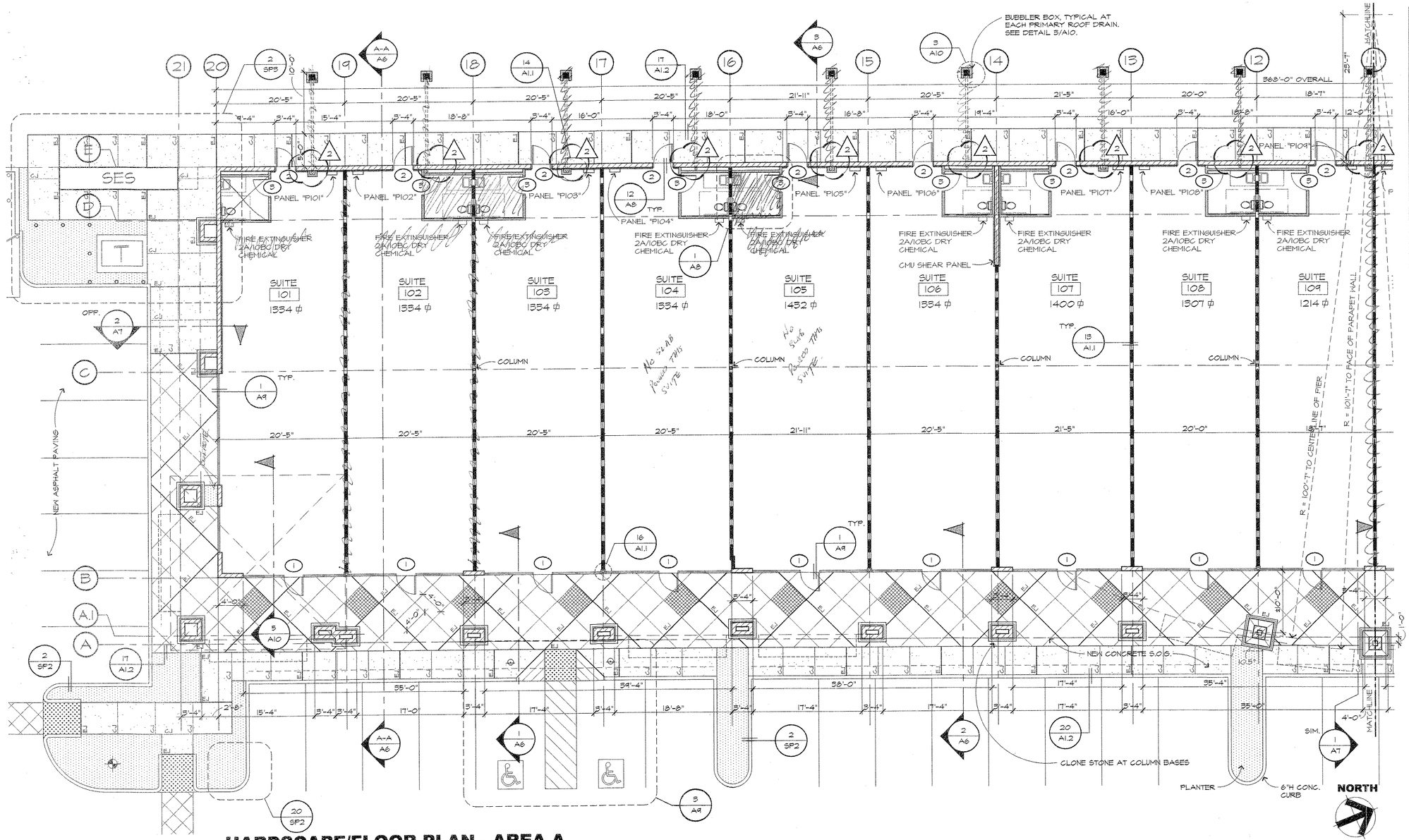

HARDSCAPE/FLOOR PLAN - AREA A

SCALE: 1/8" = 1'-0"

WALL LEGEND *

8"x8"x16" REINFORCED CMU WALL SEE BUILDING ELEVATIONS FOR ADDITIONAL INFORMATION

FULL HEIGHT PARTITION - 6" x 20 GA. METAL STUDS AT 24" O.C. TO B.O. ROOF DECK WITH 5/8" TYPE 'X' GYP. BRD. TO B.O. ROOF DECK. PROVIDE FOAM GASKETS AT TOP AND BOTTOM TRACKS TYPICAL. WITH HORIZONTAL BLOCKING AT 10'-0" O.C. MAXIMUM.

FULL HEIGHT PARTITION - 3 5/8" x 20 GA. METAL STUDS AT 24" O.C. WITH 5/8" GYP. BRD. BOTH SIDES TO 6" ABOVE CEILING LINE (NOTE: 5/8" W.R. TYP. X GYP. BRD. ON INSIDE OF TOILET ROOM), WITH R-13 INSUL. PROVIDE FOAM GASKETS AT TOP AND BOTTOM TRACK, TYPICAL.

FURRING - 1 1/2" x 22 GA. METAL Z-STUDS AT 24"O.C. WITH 5/8" TYPE 'X' GYP. BRD. ONE SIDE TO 6" ABOVE CEILING LINE WITH 1 1/2" RIGID INSULATION MECHANICALLY FASTENED TO CMU.

* ALL INTERIOR WALLS TO BE SANDED, TAPED, READY FOR FINISH (EXCEPT RESTROOM WALLS) SEE 3/A8 FOR RESTROOM ELEVATIONS

SYMBOL LEGEND

DETAIL REFERENCE
DETAIL SYMBOL
SHEET NUMBER (-) INDICATES SAME SHEET

SECTION REFERENCE
SECTION SYMBOL
SHEET NUMBER (-) INDICATES SAME SHEET

ELEVATION NUMBER
WALLS SHOWN IN ELEVATION
SHEET NUMBER (-) INDICATES SAME SHEET

ELEVATION NUMBER
ELEVATION SYMBOL
SHEET NUMBER (-) INDICATES SAME SHEET

ROOM NAME RM # — ROOM NUMBER

DOOR NUMBER

FINISH NOTE

HARDSCAPE LEGEND:

E.J. EXPANSION JOINT

C.J. CONTROL JOINT

MEDIUM BROOM FINISH STANDARD GREY COLORED CONCRETE. SLOPE TO DRAIN AWAY FROM BUILDING MIN. OF 1% and NOT TO EXCEED 2% MAX. PROVIDE CONTROL and EXPANSION JOINTS AS NOTED ON PLAN.

SALT FINISH STANDARD GREY COLORED CONCRETE WITH DIAGONAL SCORING AS SHOWN. SLOPE TO DRAIN AWAY FROM BUILDING MIN. OF 1% and NOT TO EXCEED 2% MAX. PROVIDE CONTROL and EXPANSION JOINTS AS NOTED ON PLAN.

MEDIUM SANDBLASTED FINISH STANDARD GREY COLORED CONCRETE WITH DIAGONAL SCORING AS SHOWN. SLOPE TO DRAIN AWAY FROM BUILDING MIN. OF 1% and NOT TO EXCEED 2% MAX.

ASBUILT
WESPAC CONSTRUCTION, INC.

Revisions
CITY OF MARICOPA
Building Safety Dept.
Approved ☑ As Noted ☑
Date 1-3-5
Need to revise sheet P1.1 to show changes from ⚠ 3 dated 11-15-05 Arch. plans and Revised Utility plan sheets C-5, C-6 dated 11-11-05

City of Maricopa – Building Safety
Date: 2005-12-12 00:00:00 Project # 5397
Reviews x1st □2nd □3rd □ Approved
Project Desc. The Shops at Maricopa Fiesta
Revision: 1
A__S__P__M__E__D__GD__F__

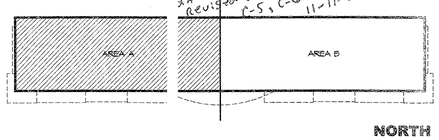

KEYPLAN

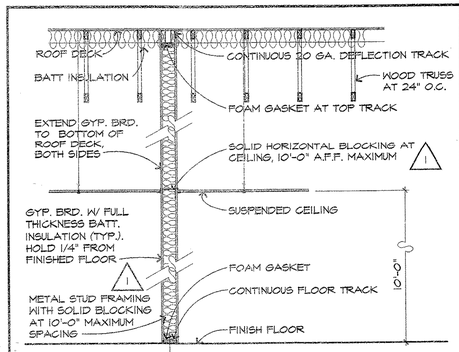

13 DEMISING WALL

SCALE: 3/8" = 1'-0"

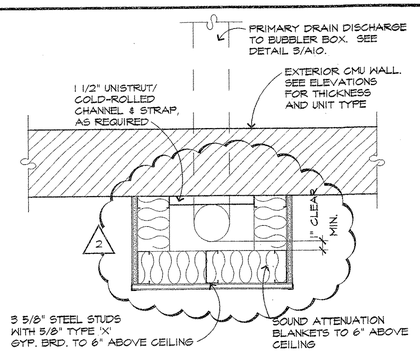

14 RDL CHASE

SCALE: 1 1/2" = 1'-0"

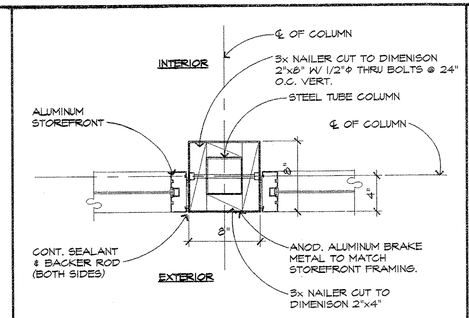

15 COLUMN AT STORE FRONT

SCALE: 1 1/2" = 1'-0"

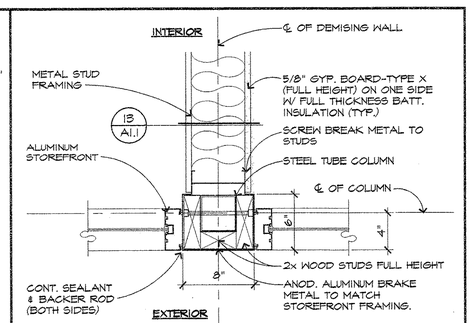

16 COLUMN AT DIMISING WALL

SCALE: 1 1/2" = 1'-0"

RBK Architects And Associates, Inc.
2233 East Thomas Road
Phoenix, Az. 85016-5474
(602) 955-3900 Phone
(602) 955-0498 Fax
www.rbaa.com

REGISTERED ARCHITECT CERTIFICATE NO. HARVEY G. UNTI 11571 Date Signed 12-12-05 ARIZONA, U.S.A.

COPYRIGHT 2005 ALL RIGHTS RESERVED. RUDOLPH BRUNKOW ARCHITECTS AND ASSOC. THIS DRAWING IS AN INSTRUMENT OF SERVICE & IS THE PROPERTY OF RUDOLPH BRUNKOW ARCHITECTS AND ASSOC. ALL AND ANY RIGHTS REPRODUCTION OR REPRODUCTION REPR OF USED. REPRODUCTION OR REPRODUCTION REPR OF USED. REPRODUCTION OR REPRODUCTION REPR OF USED.

10-14-05	CITY REVISIONS	
11-15-05	OWNER VE CHANGES	

HARDSCAPE/FLOOR PLAN AREA A

NOTICE OF ALTERNATE BILLING OR PAYMENT PROCEDURE: THIS DOCUMENT SHALL NOT COMPLY TO REQUIRE THE DIMENSION OF BILLING OR PAYMENT PROCEDURE OF THE ARCHITECT. THIS DOCUMENT SHALL ALLOW THE OWNER TO MAKE PAYMENT ON SUCH PROCEDURE AS DEEMED BY THE OWNER AND ARCHITECT AND APPROVAL OF BILLING AND ESTIMATED WRITTEN DESCRIPTION OF EACH OTHER BILLING PROCEDURE AS DEEMED BY THE OWNER AND AVAILABLE FROM THE OWNER AT THE OFFICES OF MARICOPA SHOPS, S.L.C. 2233 EAST THOMAS ROAD, SUITE 207 PHOENIX, ARIZONA 85016 (602) 955-3900

OR AS DESIGNATED AGENT SHALL PROVIDE A WRITTEN DESCRIPTION OF PROCEDURE

MARICOPA FIESTA PHASE 4
MARICOPA SHOPS, L.L.C.

SWC SMITH-ENKE ROAD AND JOHN WAYNE PARKWAY (S.R. 347)
MARICOPA, ARIZONA

design KF
drawn CAJ
check HU

sheet A1.1
of
job 05050.00