Exhibit D - Photometric Plan

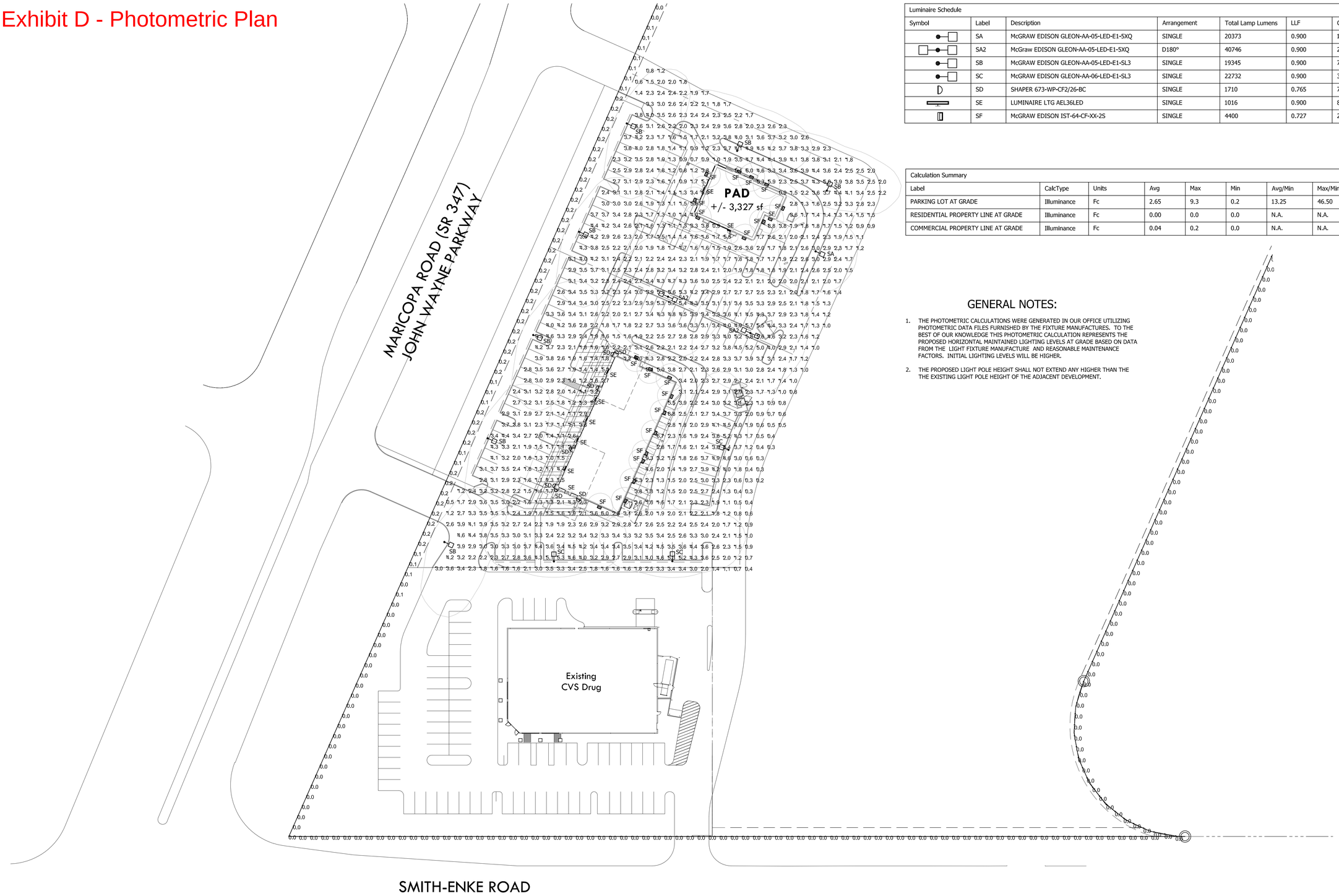

Luminaire Schedule						
Symbol	Label	Description	Arrangement	Total Lamp Lumens	LLF	Qty
	SA	McGRAW EDISON GLEON-AA-05-LED-E1-5XQ	SINGLE	20373	0.900	1
	SA2	McGraw EDISON GLEON-AA-05-LED-E1-5XQ	D180°	40746	0.900	2
	SB	McGRAW EDISON GLEON-AA-05-LED-E1-SL3	SINGLE	19345	0.900	7
	SC	McGRAW EDISON GLEON-AA-06-LED-E1-SL3	SINGLE	22732	0.900	3
	SD	SHAPER 673-WP-CF2/26-BC	SINGLE	1710	0.765	7
	SE	LUMINAIRE LTG AEL36LED	SINGLE	1016	0.900	8
	SF	McGRAW EDISON IST-64-CF-XX-2S	SINGLE	4400	0.727	21

Calculation Summary							
Label	CalcType	Units	Avg	Max	Min	Avg/Min	Max/Min
PARKING LOT AT GRADE	Illuminance	Fc	2.65	9.3	0.2	13.25	46.50
RESIDENTIAL PROPERTY LINE AT GRADE	Illuminance	Fc	0.00	0.0	0.0	N.A.	N.A.
COMMERCIAL PROPERTY LINE AT GRADE	Illuminance	Fc	0.04	0.2	0.0	N.A.	N.A.

GENERAL NOTES:

1. THE PHOTOMETRIC CALCULATIONS WERE GENERATED IN OUR OFFICE UTILIZING PHOTOMETRIC DATA FILES FURNISHED BY THE FIXTURE MANUFACTURES. TO THE BEST OF OUR KNOWLEDGE THIS PHOTOMETRIC CALCULATION REPRESENTS THE PROPOSED HORIZONTAL MAINTAINED LIGHTING LEVELS AT GRADE BASED ON DATA FROM THE LIGHT FIXTURE MANUFACTURE AND REASONABLE MAINTENANCE FACTORS. INITIAL LIGHTING LEVELS WILL BE HIGHER.
2. THE PROPOSED LIGHT POLE HEIGHT SHALL NOT EXTEND ANY HIGHER THAN THE THE EXISTING LIGHT POLE HEIGHT OF THE ADJACENT DEVELOPMENT.

suite six architecture + planning
6111 N. Cattletrack
Scottsdale, Arizona 85250
480.348.7880 p
480.874.2612 f

LEVEL 4 STUDIO
LEVEL4 STUDIO, L.L.C.
5050 N. 7TH AVE.
SUITE 208
PHOENIX | ARIZONA | 85013
T:602.374.4920
F:602.374.4921
WWW.LEVEL4STUDIO.COM

VINTAGE PARTNERS

MARICOPA STATION
Maricopa , Arizona

Date: April 30, 2014

Revisions:

This drawing is not to be used or reproduced without the consent of Suite 6 Architecture + Planning, Inc. The designs, images, and concepts on this drawing are the property of Suite 6 Architecture + Planning, Inc.

PROGRESS PRINT
NOT FOR
CONSTRUCTION

1 Photometric Site Plan

SCALE: 1"= 40'-0"

north

0' 40' 80' 160'

Kraemer Engineering, Inc.
Mechanical and Electrical Consulting Engineers
2050 N. Whispering Wind Dr., Suite 158
Phoenix, Arizona 85085-2264
(602) 285-1669
(602) 285-1450 - Fax
JOB # 14-07

Photometric Site Plan

Sheet PH1

Exhibit D - Photometric Plan

McGRAW-EDISON®

Catalog #		Type
Project		SA, SB, SC
Comments		Date
Prepared by		

DESCRIPTION

The Galleon™ LED luminaire delivers exceptional performance in a highly scalable, low-profile design. Patented, high-efficiency AccuLED Optics™ system provides uniform and energy conscious illumination to walkways, parking lots, roadways, building areas and security lighting applications. IP66 rated and UL/cUL Listed for wet locations.

SPECIFICATION FEATURES

Construction
Extruded aluminum driver enclosure thermally isolated from Light Squares for optimal thermal performance. Heavy-wall, die-cast aluminum end caps enclose housing and die-cast aluminum heat sinks. A unique, patent pending interlocking housing and heat sink provides scalability with superior structural rigidity. 3G vibration tested. Optional tool-less hardware available for ease of entry into electrical chamber. Housing is IP66 rated.

Optics
Choice of 12 patented, high-efficiency AccuLED Optics™ manufactured from injection molded acrylic. Optics are precisely designed to shape the distribution maximizing efficiency and application spacing. AccuLED Optics create consistent distributions with the scalability to meet customized application requirements. Offered standard in 4000K (+/- 275K) CCT and nominal 70 CRI. Optional 6000K CCT and 3000K CCT (80 CRI).

Electrical
LED drivers are mounted to removable tray assembly for ease of maintenance. 120-277V 50/60Hz, 347V 60Hz or 480V 60Hz operation. Shipped standard with Cooper Lighting proprietary circuit module designed to withstand 10kV of transient line surge. The Galleon LED luminaire is suitable for operation in -40°C to 40°C ambient environments. For applications with ambient temperatures exceeding 40°C, specify the HA (High Ambient) option. Light Squares are IP66 rated. 90% lumen maintenance expected at 60,000 hours.

Mounting
Extruded aluminum arm includes internal bolt guides allowing for easy positioning of fixture during assembly. Designed for pole or wall mounting. When mounting two or more luminaires at 90° or 120° apart, the EA extended arm may be required. Refer to the arm mounting requirement table on page 3. For wall mounting, specify wall mount bracket option. 3G vibration rated.

Finish
Housing finished in Super durable TGIC polyester powder coat paint, 2.5 mil nominal thickness for superior protection against fade and wear. Heat sink is powder coated black. Standard colors include black, bronze, grey, white, dark platinum and graphite metallic. RAL and custom color matches available. Consult the McGraw-Edison Architectural Colors brochure for the complete selection.

Warranty
Five-year warranty.

GLEON
GALLEON LED

1-10 Light Squares
Solid State LED

AREA/SITE LUMINAIRE

DIMENSIONS

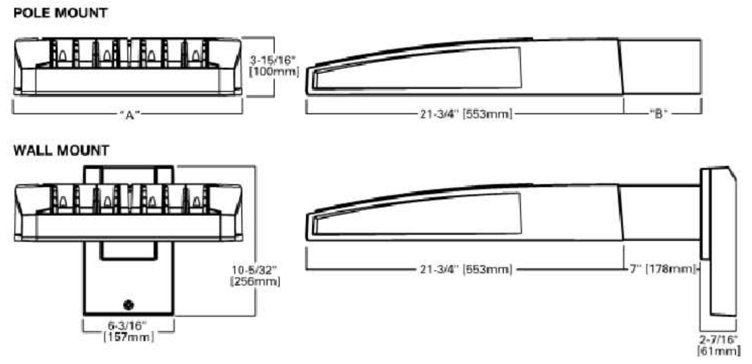

DIMENSION DATA

Number of Light Squares	"A" Width	"B" Standard Arm Length	"B" Optional Arm Length[1]	Weight with Arm (lbs.)	EPA with Arm[2] (Sq. Ft.)
1-4	15-1/2" (394mm)	7" (178mm)	10" (254mm)	33 (15.0 kgs.)	0.96
5-6	21-5/8" (549mm)	7" (178mm)	10" (254mm)	44 (20.0 kgs.)	1.00
7-8	27-5/8" (702mm)	7" (178mm)	13" (330mm)	54 (24.5 kgs.)	1.07
9-10	33-3/4" (857mm)	7" (178mm)	16" (406mm)	63 (28.6 kgs.)	1.12

NOTES: 1. Optional arm length to be used when mounting two fixtures at 90° on a single pole. 2. EPA calculated with optional arm length.

CERTIFICATION DATA
UL/cUL Wet Location Listed
ISO 9001
LM79 / LM80 Compliant
3G Vibration Rated
ARRA Compliant
DesignLights Consortium® Qualified*
IP66 Rated

ENERGY DATA
Electronic LED Driver
>0.9 Power Factor
<20% Total Harmonic Distortion
120V-277V 50/60Hz
347V & 480V 60Hz
-40°C Min. Temperature
40°C Max. Temperature
50°C Max. Temperature (HA Option)

Cooper Lighting by EATON

*www.designlights.org

ADH120541
2013-10-01 09:53:38

GLEON GALLEON LED

ORDERING INFORMATION

Sample Number: GLEON-AA-04-LED-E1-T3-GM

Product Family[1]	Light Engine	Number of Light Squares[2]	Lamp Type	Voltage	Distribution	Color	Mounting
GLEON=Galleon	AA=1A, UL Class 2	01=1 02=2 03=3 04=4 05=5 06=6 07=7 08=8 09=9 10=10	LED=Solid State Light Emitting Diodes	E1=120-277V 347=347V[3] 480=480V[3]	T2=Type II T3=Type III T4=Type IV SL2=Type II w/Spill Control SL3=Type III w/Spill Control SL4=Type IV w/Spill Control 5MQ=Type V Square Medium 5WQ=Type V Square Wide 5XQ=Type V Square Extra Wide RW=Rectangular Wide SLL=90° Spill Light Eliminator Left SLR=90° Spill Light Eliminator Right	AP=Grey BZ=Bronze BK=Black DP=Dark Platinum GM=Graphite Metallic WH=White	[Blank]=Arm for Round or Square Pole EA=Extended Arm[4] MA=Mast Arm Adapter[5] WM=Wall Mount

Options (Add as Suffix)	Accessories (Order Separately)
2L=Two Circuits[6,7] 7060=70 CRI 6000K[8] 8030=80 CRI 3000K[8] DIM=0-10V Dimming Drivers[3,10] HA=50°C High Ambient[7] L90=Optics Rotated 90° Left LCF=Matching Housing and Light Square Frame Color MS/DIM-LXX=Motion Sensor for Dimming Operation[11,12,13,14] MS/X-LXX=Motion Sensor for On/Off Operation[13,14,15] P=Button Type Photocontrol (120, 208, 240 or 277V) R=NEMA Twistlock Photocontrol Receptacle R90=Optics Rotated 90° Right TH=Tool-less Door Hardware AMBER=Amber LEDs[8] MT=Factory Installed Mesh Top DIMRF-LW=LumaWatt Wireless Sensor, Wide Lens for 8' - 16' Mounting Height[16] DIMRF-LN=LumaWatt Wireless Sensor, Narrow Lens for 16' - 40' Mounting Height[16]	OA/RA1016=NEMA Photocontrol Multi-Tap - 105-285V OA/RA1027=NEMA Photocontrol - 480V OA/RA1201=NEMA Photocontrol - 347V OA/RA1013=Photocontrol Shorting Cap OA/RA1014=120V Photocontrol MA1252=10kV Surge Module Replacement MA1036-XX=Single Tenon Adapter for 2-3/8" O.D. Tenon MA1037-XX=2 @ 180° Tenon Adapter for 2-3/8" O.D. Tenon MA1197-XX=3 @ 120° Tenon Adapter for 2-3/8" O.D. Tenon MA1188-XX=4 @ 90° Tenon Adapter for 2-3/8" O.D. Tenon MA1189-XX=2 @ 90° Tenon Adapter for 2-3/8" O.D. Tenon MA1190-XX=3 @ 90° Tenon Adapter for 2-3/8" O.D. Tenon MA1191-XX=2 @ 120° Tenon Adapter for 2-3/8" O.D. Tenon MA1038-XX=Single Tenon Adapter for 3-1/2" O.D. Tenon MA1039-XX=2 @ 180° Tenon Adapter for 3-1/2" O.D. Tenon MA1192-XX=3 @ 120° Tenon Adapter for 3-1/2" O.D. Tenon MA1193-XX=4 @ 90° Tenon Adapter for 3-1/2" O.D. Tenon MA1194-XX=2 @ 90° Tenon Adapter for 3-1/2" O.D. Tenon MA1195-XX=3 @ 90° Tenon Adapter for 3-1/2" O.D. Tenon FSIR-100=Wireless Configuration Tool for Occupancy Sensor[17] GLEON-MT1=Field Installed Mesh Top for 1-4 Light Squares GLEON-MT2=Field Installed Mesh Top for 5-6 Light Squares GLEON-MT3=Field Installed Mesh Top for 7-8 Light Squares GLEON-MT4=Field Installed Mesh Top for 9-10 Light Squares

Notes:
1. DesignLights Consortium® Qualified. Refer to www.designlights.org Qualified Products List under Family Models for details.
2. Standard 4000K CCT and nominal 70 CRI.
3. LumaWatt Wireless Sensors not currently available for 347V or 480V applications.
4. May be required when two or more luminaires are oriented on a 90° or 120° drilling pattern. Refer to arm mounting requirement table.
5. Factory installed.
6. Not available with 6 Light Squares in 347V or 480V.
7. Not available with LumaWatt wireless sensors.
8. Consult your Cooper Lighting representative for lead times and lumen multiplier.
9. Not available with 5 or 6 Light Squares in 347V or 480V.
10. Consult your Cooper Lighting representative before ordering DIM with 2L option.
11. Replace XX with mounting height in feet for proper selection, e.g., MS/DIM-L25.
12. 120V or 277V 60Hz and 230V 50Hz only. Replace E1 with specific voltage. Consult factory for availability in 347V and 480V.
13. The FSIR-100 accessory is required to adjust parameters.
14. Not available with HA option.
15. Replace X with number of Light Squares operating in low output mode and replace XX with mounting height in feet for proper lens selection, e.g., MS/3-L25.
16. LumaWatt wireless sensors are factory installed only requiring network components RF-EM1, RF-GW1, and RF-ROUT1 in appropriate quantities. See www.cooperlighting for LumaWatt application information.
17. This tool enables adjustment of parameters including high and low modes, sensitivity, time delay, cutoff and more. Consult your Cooper Lighting representative for additional details.

Cooper Lighting by EATON

Eaton
1000 Eaton Boulevard
Cleveland, OH 44122
United States
Eaton.com

Eaton's Cooper Lighting Business
1121 Highway 74 South
Peachtree City, GA 30269
P: 770-486-4800
www.cooperlighting.com

Specifications and dimensions subject to change without notice.

ADH120541
2013-10-01 09:53:38

FIXTURE TYPES SA, SA2, SB & SC

Shaper
shaperlighting.com

Catalog #		Type
Project		SD
Comments		Date
Prepared by		

DESCRIPTION

674 Luminous Wall Sconce features horizontal trim bars with a vertical fin detail and is ADA compliant. Design options, such as perforated metal, colored acrylic, and different trim bar configurations are available.

SPECIFICATION FEATURES

Material
Painted solid aluminum with a matte white acrylic diffuser with a regressed aluminum perf shield. Wet location lamp and ballast housing with 1/8" clear acrylic diffuser.

Finish
Premium TGIC polyester powder coat paint, 2.5 mil nominal thickness for superior protection against fade and wear.
Standard: Aluminum Paint (ALP).
Premium: Black Paint (BK), Bronze Metallic Paint (BM), Dark Platinum Paint (DP), Gold Metallic Paint (GM), Graphite Metallic Paint (GRM), Grey Paint (GY), White Paint or Custom Color (CC).

Optics
Refer to www.shaperlighting.com for complete photometrics.

Ballast
Integral electronic HPF multi-volt 120/277V (347V Canada), thermally protected with end-of-life circuitry to accommodate the specified lamp wattage.

Lamp/Socket
31": Two (2) 14WT5 linear miniature bi-pin fluorescent lamps.
43": Two (2) 21WT5 linear miniature bi-pin fluorescent lamps.
55": Two (2) 28WT5 linear miniature bi-pin fluorescent lamps.
Fluorescent socket injection molded plastic. Lamps furnished by others.

Installation
Supplied with a mounting back for a standard 4" J-box or stucco ring.

Options
Modified Length - Contact factory, Alternative Trim Bars or Perf Accent Design - Contact factory, Green Glass Acrylic (GGA).

Labels
U.L. and C.U.L. listed for wet location. ADA compliant.

Modifications
Shaper's skilled craftspeople with their depth of experience offer the designer the flexibility to modify standard exterior wall luminaires for project specific solutions. Contact the factory regarding scale options, unique finishes, mounting, additional materials/colors, or decorative detailing.

674-WP SERIES

Exterior Wall Luminaire
Luminous Sconce

ORDERING INFORMATION

Sample Number: 674-55-WP-T5/2/28-277V-ALP

Series	Size	Mounting Type	Lamp	Voltage	Finish[4]	Options
674 = Luminous Wall Sconce	31" 43" 55"	WP = Exterior Wall	T5/2/14[1] T5/2/21[2] T5/2/28[3]	120V 277V 347V	Standard ALP = Aluminum Paint Premium BK = Black BM = Bronze Metallic Paint CC = Custom Color DP = Dark Platinum Paint GM = Gold Metallic Paint GRM = Graphite Metallic Paint GY = Grey WH = White	GGA = Green Glass Acrylic

1 Available in 31".
2 Available in 43".
3 Available in 55".
4 Premium TGIC polyester powder coat paint, 2.5 mil nominal thickness for superior protection against fade and wear.

ARRA
Shaper Lighting certifies that its products satisfy the requirements of Section 1605 of the American Recovery and Reinvestment Act (also known as the ARRA Buy American provision).

AMERICAN DISABILITIES ACT (ADA)
Shaper offers a large selection of ADA interior and exterior wall luminaires. ADA requires all fixtures below 80" to have a maximum projection of 4".

COOPER Lighting
www.cooperlighting.com

Specifications and dimensions subject to change without notice.
Consult your representative for additional options and finishes.

ADS042804
2012-03-30 16:50:53

Shaper
shaperlighting.com

674-WP SERIES EXTERIOR WALL

MOUNTING TYPE

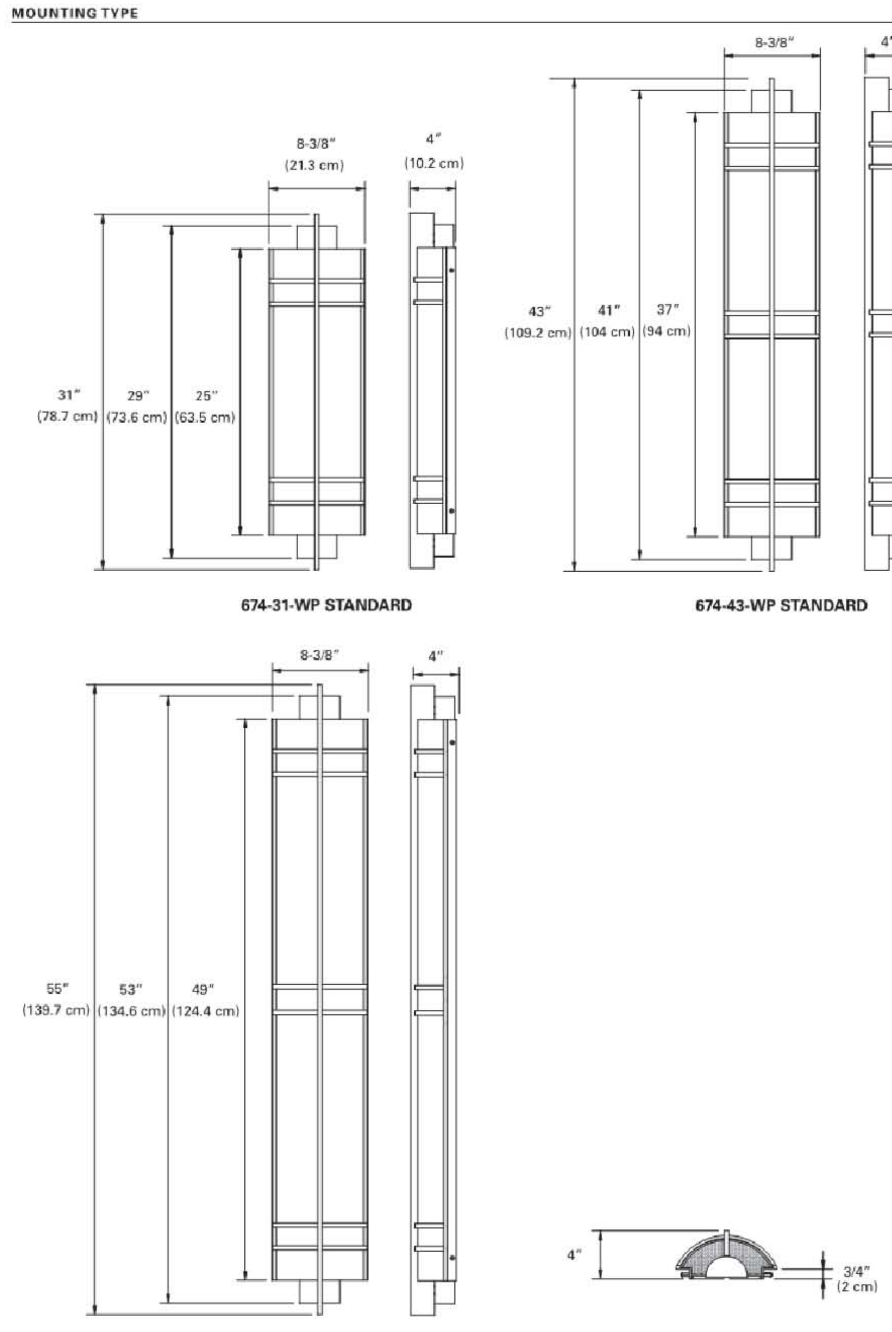

COOPER Lighting
www.cooperlighting.com

Specifications and dimensions subject to change without notice.
Consult your representative for additional options and finishes.

ADS042804
2012-03-30 16:50:53

FIXTURE TYPE SD

Architectural Egress
AEL

Full Cut-off
Vandal Resistant LED

Project Information

Fixture Type	SE	Date	
Job Name			
Approved By			
Catalog No.	AEL - - - - -		

WALL MOUNT
LAMPS: LED

SPECIFICATIONS

Description	The Architectural Egress Luminaire combines a unique, patented design shaped with high performance, full cut-off optics to achieve completely unobtrusive illumination of a space or path of egress. When mounted over a doorway, the fixture is perceived as an element of the building structure and, additionally, provides water protection in the form of a drip cap over the doorway. Multiple lengths are available to match a given door opening and our unique quick mount system facilitates installation and maintenance.
Housing	Marine grade heat treated extruded aluminum. Chemically primed and finished with robotically applied polyester powder coat.
Wall Mount	Marine grade heat treated extruded aluminum. Chemically primed and finished with robotically applied polyester powder coat. Designed to provide quick mounting to housing and secured with (2) captive stainless steel TORX® head screws.
Lens Frame	Marine grade heat treated extruded aluminum, clear anodized. Secured to fixture via integral concealed hinge and (3) captive stainless steel TORX® head screws.
Lens	UV stabilized diffused extruded polycarbonate.
End Caps	Die-cast marine grade aluminum continuously welded to housing. All welds ground smooth.
Reflector	Electrolytically brightened anodized aluminum PVD coated and absolutely color-free of iridescence. Shaped to provide full cutoff, LED point dispersion and maximum efficiency.
Drivers	Constant current drivers at 350mA. High output version utilizes 700mA.
LED	Cree XPG @ 3500K and 80.2 CRI. L_{70} projected life of 75,000 hours at 50 C. Tested in accordance with LM-80. Ten year warranty on LED boards against operational defects.
Gaskets	Closed cell self-adhesive neoprene to provide watertight seal between fixture and wall and between fixture and lens frame.
UL Listing	U.L., C.UL., Wet standard.
Lifetime Warranty	Luminaire LED Incorporated will repair or replace any fixture damaged due to vandalism for the lifetime of the installation

DIMENSIONAL DATA

	A	B	C
AEL12	20.79	5.40	3.60
AEL24	32.04	5.40	3.60
AEL36	43.29	5.40	3.60
AEL48	54.75	5.40	3.60
AEL72	78.75	5.40	3.60

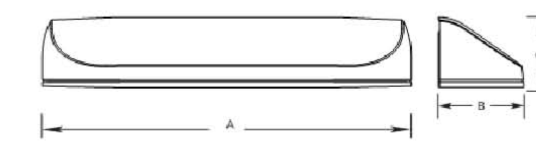

5 Sutton Place• P.O. Box 2162 • Edison, NJ • 08818
P. 732.549.0056 F. 732.549.9737

Luminaire Led
www.luminaireled.net

Made in USA
Luminaire LED Incorporated products are manufactured in the USA with components purchased from USA suppliers, and meet the Buy American requirements under the ARRA.

Rev: 12/13

Architectural Egress
AEL

Full Cut-off
Vandal Resistant LED

Fixture Type	SE

ORDERING INFORMATION

SERIES AEL — LENGTH — LED — VOLTS — LENS — COLORS — OPTIONS — TX/SD (REQUIRED)

LENGTH	LED	VOLTS	LENS	COLORS	OPTIONS
12" 24" 36" 48" 72"	12" 10W LED 24" 11W LED 22W LED 36" 16W LED 32W LED 48" 21W LED 42W LED 72" 32W LED 64W LED	120 277	DP Diffused Polycarbonate	BKH - Black Hammertone BZH - Bronze Hammertone SVH - Silver Hammertone WOP - White Orange Peel PCP - Prime coat, paintable CUST - Custom color, Consult factory	PC 2B GLR EMB20R EMB125R OCC ST/SC

OPTIONS

PC	Photoelectric switch.
2B	(2) LED drivers for independent LED board operation. N/A with AEL12". N/A with the OCC option.
GLR	Fuse and fuse holder.
EMB20R	Remote mounted micro inverter that will operate a 25W maximum load for 90 minutes. 0 C (32 F) to 45 C (113 F).
EMB125R	Stand-alone inverter that will operate a 125W maximum load for 90 minutes. Select ceiling grid, recessed wall or surface mount. 20 C (68 F) to 30 C (86 F).
OCC	Occupancy sensor. Maximum coverage of 10' radius from 8' height.
ST/SC	Slotted screws instead of TORX® head.
TX/SD	TORX® head bit.

5 Sutton Place• P.O. Box 2162 • Edison, NJ • 08818
P. 732.549.0056 F. 732.549.9737

Luminaire Led
www.luminaireled.net

Made in USA
Luminaire LED Incorporated products are manufactured in the USA with components purchased from USA suppliers, and meet the Buy American requirements under the ARRA.

FIXTURE TYPE SE

---

suite six
architecture + planning
6111 N. Cattletrack
Scottsdale, Arizona 85250
480.348.7800 p
480.874.2612 f

LEVEL 4 STUDIO
LEVEL4 STUDIO, L.L.C.
6858 N. 7TH AVE.
SUITE 209
PHOENIX | ARIZONA | 85013
T>602.374.4920
F>602.374.4922
WWW.L4STUDIO.COM

VINTAGE
PARTNERS

MARICOPA STATION
Maricopa , Arizona

Date: April 30, 2014

Revisions:

This drawing is not to be used or reproduced without the consent of Suite 6 Architecture + Planning, Inc. The designs, images, and concepts on this drawing are the property of Suite 6 Architecture + Planning, Inc.

PROGRESS PRINT
NOT FOR
CONSTRUCTION

Photometric Cut Sheets

Sheet PH2

Kraemer Engineering, Inc.
Mechanical and Electrical Consulting Engineers
2050 W. Whispering Wind Dr., Suite 158
Phoenix, Arizona 85085-2864
(602) 285-1669
(602) 285-9450 - fax
JOB # 14-67

Exhibit D - Photometric Plan

GENERAL NOTE:

1. THE PROPOSED LIGHT POLE HEIGHT SHALL NOT EXTEND ANY HIGHER THAN THE THE EXISTING LIGHT POLE HEIGHT OF THE ADJACENT DEVELOPMENT.

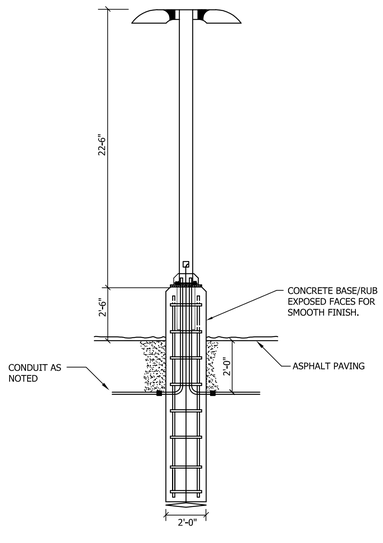

POLE BASE DETAIL

N.T.S. TYPE SA, SB & SC FIXTURES

McGRAW-EDISON®

DESCRIPTION

The IMPACT Elite Trapezoid cutoff wall luminaire makes an ideal complement to site design. Rugged construction and full cutoff classified optics provide facade and security lighting for light restricted zones surrounding schools, office complexes, apartments, and recreational facilities. U.L. and cUL Listed for wet locations in down mount applications and damp locations in up mounted applications.

Catalog #	IST-64-CF	Type: SF
Project		
Comments		Date
Prepared by		

SPECIFICATION FEATURES

Construction
Two-piece die-cast aluminum housing and removable hinged door frame nests securely for precise tolerance control and repeatability. Hinged door frame inset for clean mating with housing surface and secured via two (2) captive stainless steel fasteners. Optional tamper resistant torx-head fasteners (TR) offer vandal resistant access to the electrical compartment. 1/8" clear, heat and impact resistant tempered flat glass lens combine with molded silicone gasket to seal the integrated optical assembly, while ensuring peak optical performance.

Electrical
Integral hard mount electrical components are secured and grounded within the die-cast aluminum housing for optimal heat sinking and extended component life. Minimum starting temperatures are -40°C (-40°F) for HPS and -30°C (-22°F) for MP. Compact fluorescent luminaires feature electronic universal 120-277V high efficiency 50/60Hz ballast with -18°C (-0°F) minimum starting temperature. Available in 50-175 HID or 26-84 CF. Emergency power pack available for 26-64 CF.

Optical
Premium anodized 95% reflective aluminum optical assemblies provide high efficiency Type II distribution. Optional silk screened house side flat glass shield provides decreased wall brightness. All Impact Elite Wall Series luminaires classify as IESNA full cutoff in downlight applications. Available with 10% or 50% uplight options for architectural highlighting of building details.

Mounting
Gasketed and zinc plated rigid steel mounting attachment fits directly to 4" j-box or wall with the Impact Elite "Hook-N-Lock" system for fast installation and mounting in both traditional downlighting (wet location) or inverted uplighting (damp location) mounting positions. Secured via two (2) captive corrosion resistant allen head set screws concealed from view, but accessible from bottom of fixture.

Finish
Housing and door are protected with 5-stage premium TGIC polyester powder coat paint. Premium TGIC powder coat finishes withstand extreme climate changes while providing optimal color and gloss retention over the fixture's installed life. Standard colors include black, bronze, grey, white, dark platinum and graphite metallic. RAL and custom color matches available. Consult McGraw-Edison Architectural Colors Brochure for complete selection.

IST
IMPACT ELITE TRAPEZOID

50 - 175W
Pulse Start Metal Halide
Metal Halide
High Pressure Sodium
26 - 84W
Compact Fluorescent

FULL CUTOFF WALL MOUNT LUMINAIRE

DARK SKY COMPLIANT FCO
NOTE: In downlight applications only.

TECHNICAL DATA
UL1598 Listed, CUL Listed
25°C Maximum Ambient Temperature
External Supply Wiring 90°C Minimum
Down Mounted – Wet Location
Up Mounted – Damp Location

ENERGY DATA
High Reactance Ballast Input Watts
50W HPS HPF (66 Watts)
50W MP HPF (72 Watts)
70W HPS HPF (91 Watts)
70W MP HPF (90 Watts)
100W HPS HPF (130 Watts)
100W MP HPF (129 Watts)
150W HPS HPF (190 Watts)
150W MP HPF (185 Watts)

Electronic Ballast Input Watts
26W CF HPF (29 Watts)
32W CF HPF (36 Watts)
42W CF HPF (46 Watts)
52W CF HPF (55 Watts)

SHIPPING DATA
Approximate Net Weight:
18 lbs. (8 kgs.)

STANDARD DIMENSIONS

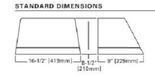

HOOK-N-LOCK MOUNTING

(Mounting attachment included. J-Box not included.)

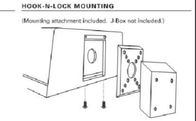

DIMENSIONS WITH BACK BOX

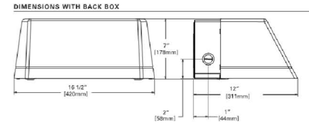

COOPER Lighting
www.cooperlighting.com

ADM100166
2013-06-13 15:30:31

IST IMPACT ELITE TRAPEZOID

PHOTOMETRICS (COMPLETE IES FILES AVAILABLE AT WWW.COOPERLIGHTING.COM)

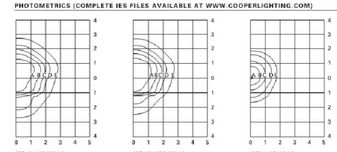

IST-150-MP-XX-2S
150 – Watt MP
14,000 – Lumen Clear Lamp

IST-150-HPS-XX-2S
150 – Watt HP
16,000 – Lumen Clear Lamp

IST-42-CF-XX-2S
42 – Watt CF
2,200 – Lumen Lamp

Footcandle Table
Select mounting height and read across for footcandle values of each isofootcandle line. Distance in units of mounting height.

Mounting Height	Footcandle Values for Isofootcandle Lines A	B	C	D	E
150-MP / 150-HPS					
10'	7.20	2.88	1.44	0.72	0.29
12'	5.00	2.00	1.00	0.50	0.20
14'	3.65	1.46	0.73	0.37	0.22
42-CF					
18'	2.44	1.23	0.62	0.25	0.12
20'	2.00	1.00	0.50	0.20	0.10
25'	1.28	0.64	0.32	0.13	0.06

ORDERING INFORMATION

Sample Number: IST-150-MP-129-2S-GM

Product Family
IST=Impact Elite Small Trapezoid

Lamp Wattage *
MZ
50=50W#
70=70W#
100=100W
150=150W
HPS
50=50W#
70=70W#
100=100W
150=150W
MH
175=175W#
CF
26=(1) 26W
32=(1) 32W
42=(1) 42W
52=(2) 26W
64=(2) 32W
84=(2) 42W

Lamp Type
MP=Pulse Start Metal Halide
HPS=High Pressure Sodium
MH=Metal Halide*
CF=Compact Fluorescent

Voltage *
120=120V
208=208V
240=240V
277=277V
347=347V
480=480V
DT=Dual-Tap*
MT=Multi-Tap*
TT=Triple-Tap*
E1=Electronic 120-277V

Distribution
2S=Type II Segmented

Color *
AP=Grey
BZ=Bronze
BK=Black
WH=White
DP=Dark Platinum
GM=Graphite Metallic

Options
S=Single Fuse (120, 277 or 347V)#
SF=Double Fuse (208, 240 or 480V)#
L=Lamp Included
P=Button Type Photocontrol (120V, 208, 240, or 277V)
TR=Tamper Resistant Fasteners
UPL10=10% Uplight
HS=House Side Shield Glass*
PL=Polycarbonate Lens* *
Q=Quartz Restrike T4 Lamp*
EM=Emergency Quartz Restrike T4 Lamp w/ Time* Delay Relay
EM/SC=Emergency Separate Circuit T4 Lamp*, 10
QMR=Quartz Restrike MR16 Lamp14, 52
2QMR=Quartz Restrike w/ (2) MR16 Lamps*1, 12
2QMR/SC=Quartz Restrike (1) MR16 Lamp and (1) Emergency Separate Circuit MR16 Lamp 52, 11, 52
EMRB=Emergency Quartz Restrike MR16*1, 12 Lamp w/ Time Delay Relay
2EMMR=Emergency Quartz Restrike with (2)11, 52 MR16 Lamps w/Time Delay Relay
2EMMR/SC=Emergency Quartz Restrike 14, 51, 12 with Time Delay Relay (1) MR16 and (1) MR16 Emergency Separate Circuit Lamp
EM/SC/MR=Emergency Separate Circuit14, 11, 12 MR16 Lamp
2EM/SC/MR=Emergency Separate Circuit14, 11, 52 with (2) MR16 Lamps
EM/SC/12V=Emergency Separate Circuit, 12V 14, 14 Low Voltage (1) MR16 Lamp
2EM/SC/12V=(2) Emergency Separate Circuit14, 14 MR16 Lamps (12V)
EM/40B=Emergency Cold Temperature (UL924 14 Listed) Power Pack - 10 degrees C / 0 degrees F, (1) CF Lamp
2EM/40B=Emergency Cold Temperature 14, 14 (UL924 Listed) Power Pack - 10 degrees C/0 degrees F, (2) CF lamps with Back Box matching housing finish.
CFEMB=Emergency CF Power Pack (UL924 14, 57 Listed) (1) CF Lamps, 0 Degrees C/32 Degrees F
2CFEMB=Emergency CF Power Pack (UL924 14, 57 Listed), 0 Degrees C/32 Degrees F, (2) CF Lamps, with Back Box matching housing finish.

Accessories
HA125-XX: Throwy back box - Impact Elite Trapezoid14

Notes:
1. HID lamps are medium base. 175W MH is available for non-U.S. markets only.
2. Not available in 480V.
3. Products also available in non-US voltages and 50Hz for international markets. Consult your Cooper Representative for availability and ordering information.
4. Dual Tap ballast is 120/277V wired 277V. Multi Tap ballast is 120/208/240/277V wired 277V. Triple Tap ballast is 120/227/240V wired 240V.
5. Available with CF Option only. In cold temperatures, compact fluorescent lamps produce lower illumination levels.
6. Add as suffix.
7. Must specify voltage.
8. Down lighting position only.
9. (1) 120W Lamp, 120W maximum quartz lamp. Ballast power may need to cycle to allow HID lamp to cool in warm climates. Not available with CF Option. Lamp supplied by others.
10. Leads out of the back of the unit for auxiliary power.
11. (1) or (2) 120V Lamps. GU16 base, 50W maximum each. Lamps supplied by others.
12. Not available with CF lamps.
13. Not available with 52, 64, 84 CF wattages.
14. (1) or (2) 12V bi-pin lamp, socket GU6.35 base, 35W maximum. Power supplied by low voltage DC source (supplied by others). Lamp supplied by others.
15. Specify 120 or 277V. -18°C minimum temperature; not available with UPL10.
16. Not available in 84 CF configuration.
17. Specify 120 or 277V. 0°C minimum temperature; not available with UPL10.
18. Order separately; replace XX with color designation.

COOPER Lighting
www.cooperlighting.com

NOTE: Specifications and dimensions subject to change without notice.
Visit our web site at www.cooperlighting.com
Customer First Center 1121 Highway 74 South Peachtree City, GA 30269 770.486.4800 FAX 770.486.4801

ADM100166
2013-06-13 15:30:31
2013-06-13 15:30:01

FIXTURE TYPE SE

suite six architecture + planning
6111 N. Cattletrack
Scottsdale, Arizona 85250
480.348.7880 p
480.874.2612 f

LEVEL 4 STUDIO
LEVEL4 STUDIO, L.L.C.
5050 E. 7TH AVE.
SUITE 200
PHOENIX / ARIZONA / 85013
T:602.374.4920
F:602.374.4922
WWW.L4STUDIO.COM

VINTAGE PARTNERS

MARICOPA STATION
Maricopa , Arizona

Date: April 30, 2014

Revisions:

This drawing is not to be used or reproduced without the consent of Suite 6 Architecture + Planning, Inc. The designs, images, and concepts on this drawing are the property of Suite 6 Architecture + Planning, Inc.

PROGRESS PRINT
NOT FOR CONSTRUCTION

Photometric Cut Sheets & Pole Detail

Sheet **PH3**

Kraemer Engineering, Inc.
Mechanical and Electrical Consulting Engineers
2050 N. Whispering Wind Dr., Suite 108
Phoenix, Arizona 85085-2864
(602) 285-1691
(602) 285-9450 - fax
JOB # 14-07