# TENTATIVE PLAT OF KINO TRAILS

A PORTION OF SOUTHWEST QUARTER OF SECTION 1, TOWNSHIP 6 SOUTH, RANGE 2 EAST
OF THE GILA AND SALT RIVER BASE AND MERIDIAN,
PINAL COUNTY, ARIZONA

## LEGAL DESCRIPTION

**Order No. NCS-209799A-PHX1**

**Parcel No.1**
The North half of the North half of the North half of the Northeast quarter of the Southwest quarter of Section 1, Township 6 South, Range 2 East of the Gila and Salt River Meridian, Pinal County, Arizona. EXCEPT all coal and other minerals, as reserved in the patent of said land

**Parcel No.2**
The South half of the North half of the North half of the Northeast quarter of the Southwest quarter of Section 1, Township 6 South, Range 2 East of the Gila and Salt River Meridian, Pinal County, Arizona. EXCEPT all coal and other minerals, as reserved in the patent of said land

**Parcel No.3**
The North half of the South half of the North half of the Northeast quarter of the Southwest quarter of Section 1, Township 6 South, Range 2 East of the Gila and Salt River Meridian, Pinal County, Arizona. EXCEPT all coal and other minerals, as reserved in the patent of said land

**Parcel No.4**
The South half of the South half of the South half of the North half of the Northeast quarter of the Southwest quarter of Section 1, Township 6 South, Range 2 East of the Gila and Salt River Meridian, Pinal County, Arizona. EXCEPT all coal and other minerals, as reserved in the patent of said land

**Parcel No.5**
The North half of the South half of the South half of the North half of the Northeast quarter of the Southwest quarter of Section 1, Township 6 South, Range 2 East of the Gila and Salt River Meridian, Pinal County, Arizona. EXCEPT all coal and other minerals, as reserved in the patent of said land

**Parcel No.6**
The South half of the Northeast quarter of the Southwest quarter of Section 1, Township 6 South, Range 2 East of the Gila and Salt River Meridian, Pinal County, Arizona. EXCEPT any portion lying within the following parcel of land in Section 1, Township 6 South, Range 2 East of the Gila and Salt River Base and Meridian, Pinal County, Arizona, being particularly described as follows: Beginning at a point on the South boundary of said Section 1 that bears North 89 degrees 51 minutes 26 seconds West 350.91 feet from the South quarter corner of said Section 1; Thence North 89 degrees 51 minutes 26 seconds West 175.00 feet along said South boundary; Thence North 00 degrees 08 minutes 34 seconds East 134.69 feet; Thence North 17 degrees 41 minutes 51 seconds West 85.78 feet: Thence North 35 degrees 32 minutes 16 seconds West 1148.07 feet; Thence North 45 degrees 19 minutes 42 seconds West 412.17 feet; Thence North 61 degrees 53 minutes 26 seconds West 1269.91 feet to the West boundary of said Section 1; Thence North 00 degrees 16 minutes 02 seconds east 309.58 feet along said west boundary to a point that bears South 00 degrees 16 minutes 02 seconds West 297.61 feet from the West quarter corner of said Section 1; Thence South 43 degrees 17 minutes 47 seconds east 419.45 feet; Thence South 61 degrees 53 minutes 26 seconds east 1286.46 feet; Thence South 35 degrees 32 minutes 16 seconds East 1476.25 feet; Thence South 00 degrees 08 minutes 34 seconds West 236.07 feet to the POINT OF BEGINNING; EXCEPT all coal and other minerals, as reserved in the patent of said land

**Parcel No.7**
The Southeast quarter of the Southwest quarter of Section 1, Township 6 South, Range 2 East of the Gila and Salt River Meridian, Pinal County, Arizona. EXCEPT any portion lying within the following described property: Beginning at a point in the South boundary of said Section 1 that bears North 89 degrees 51 minutes 26 seconds West 350.91 feet from the South quarter corner of said Section 1; Thence North 89 degrees 51 minutes 26 seconds West 175.00 feet along said South boundary; Thence North 00 degrees 08 minutes 34 seconds East 134.69 feet; Thence North 17 degrees 41 minuets 51 seconds West 85.78 feet; Thence North 35 degrees 32 minutes 16 seconds West 1148.07 feet; Thence North 45 degrees 19 minutes 42 seconds West 412.17 feet; Thence North 61 degrees 53 minutes 26 seconds West 1269.91 feet to the West boundary of said Section 1; Thence North 00 degrees 16 minutes 02 seconds East 309.58 feet along said West boundary to a point that bears South 00 degrees 16 minutes 02 seconds West 297.61 feet from the West quarter corner of said Section 1; Thence South 43 degrees 17 minutes 47 seconds East 419.45 feet; Thence South 61 degrees 53 minutes 26 seconds east 1286.46 feet; Thence South 35 degrees 32 minutes 16 seconds East 1476.25 feet; Thence South 00 degrees 08 minutes 34 seconds West 236.07 feet to the POINT OF BEGINNING.

**Parcel No.8**
The East 40 feet of the following described property. The South half of the Northeast quarter of the Southwest quarter of Section 1, Township 6 South, Range 2 East of the Gila and Salt River Meridian, Pinal County, Arizona. EXCEPT any portion lying within the following parcel of land in Section 1, Township 6 South, Range 2 East of the Gila and Salt River Base and Meridian, Pinal County, Arizona, being particularly described as follows: Beginning at a point on the South boundary of said Section 1 that bears North 89 degrees 51 minutes 26 seconds West 350.91 feet from the South quarter corner of said Section 1; Thence North 89 degrees 51 minutes 26 seconds West 175.00 feet along said South boundary Thence North 00 degrees 08 minutes 34 seconds East 134.69 feet; Thence North 17 degrees 41 minutes 51 seconds West 85.78 feet: Thence North 35 degrees 32 minutes 16 seconds West 1148.07 feet; Thence North 45 degrees 19 minutes 42 seconds West 412.17 feet; Thence North 61 degrees 53 minutes 26 seconds West 1269.91 feet to the West boundary of said Section 1; Thence North 00 degrees 16 minutes 02 seconds east 309.58 feet along said west boundary to a point that bears South 00 degrees 16 minutes 02 seconds West 297.61 feet from the West quarter corner of said Section 1; Thence South 43 degrees 17 minutes 47 seconds east 419.45 feet; Thence South 61 degrees 53 minutes 26 seconds east 1286.46 feet; Thence South 35 degrees 32 minutes 16 seconds East 1476.25 feet; Thence South 00 degrees 08 minutes 34 seconds West 236.07 feet to the POINT OF BEGINNING; EXCEPT all coal and other minerals, as reserved in the patent of said land

**Parcel No.9**
The East 40 feet of the following described property.The North half of the North half of the North half of the Northeast quarter of the Southwest quarter of Section 1, Township 6 South, Range 2 East of the Gila and Salt River Meridian, Pinal County, Arizona. EXCEPT all coal and other minerals, as reserved in the patent of said land

**Parcel No.10**
The East 40 feet of the following described property. The South half of the North half of the North half of the Northeast quarter of the Southwest quarter of Section 1, Township 6 South, Range 2 East of the Gila and Salt River Meridian, Pinal County, Arizona. EXCEPT all coal and other minerals, as reserved in the patent of said land

**Parcel No.11**
The East 40 feet of the following described property. The North half of the South half of the North half of the Northeast quarter of the Southwest quarter of Section 1, Township 6 South, Range 2 East of the Gila and Salt River Meridian, Pinal County, Arizona. EXCEPT all coal and other minerals, as reserved in the patent of said land

## BASIS OF BEARINGS

## BENCHMARK

NGS STATION B-422 DC1227 A STAINLESS STTEL ROD IN SLEEVE STAMPED B-422 1980. 0.1 MILE SOUTHEAST ALONG THE SOUTHERN PACIFIC RAILROAD FROM THE MARICOPA RAILROAD CROSSING, IN LINE WITH A ROW OF TELEGRAPH POLES. ELEVATION 1173.50 NAVD88

## LAND USE TABLE

| | |
|---|---|
| GROSS ACREAGE | 73.20 ACRES |
| AREA OF PUBLIC STREETS | 17.11 ACRES |
| NET ACREAGE | 56.09 ACRES |
| AREA OF OPEN SPACE | 20.03 ACRES |
| AREA OF LOTS | 36.06 ACRES |
| PERCENTAGE OF OPEN SPACE | 27.4% |
| AVERAGE AREA PER LOT | 6,136 SF |
| TOTAL NUMBER OF LOTS | 256 |
| DENSITY | 3.5 DU/ACRE |
| PROPOSED LOTS AT MINIMUM 7,000 SF | 10% |

## DEVELOPER

KINO TRAILS, L.L.C.
3333 N. 44TH ST.
PHOENIX, ARIZONA 85018
PHONE: 480-600-0500
FAX: 602-955-2735
CONTACT: RUSSELL LATHEM

## ENGINEER

FETTER ENGINEERING GROUP
5345 E. McLELLAN RD. SUITE 100
MESA, ARIZONA 85205
PHONE: 480-220-5379
FAX: 480-558-0779
CONTACT: COURT FETTER

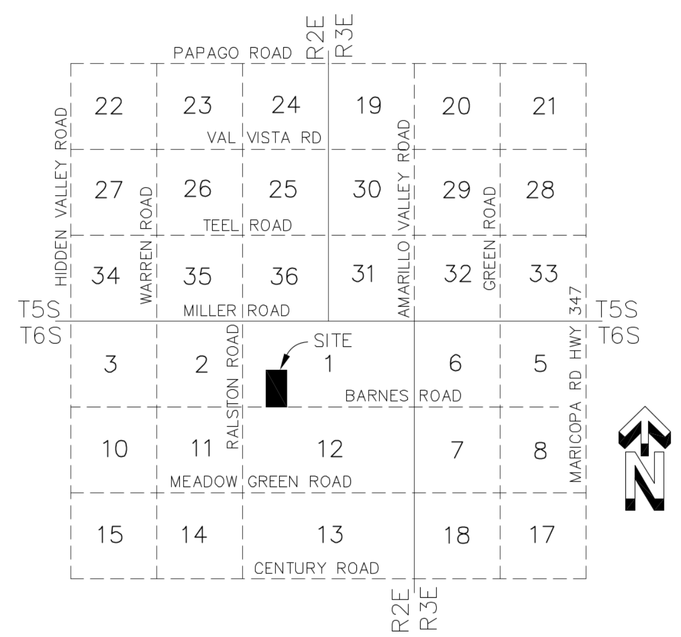


## VICINITY MAP

N.T.S.

## LOCATION MAP

NOT TO SCALE

## BASE ZONING

A PLANNED AREA DEVELOPMENT WITHIN CR-3 ZONE
SINGLE FAMILY LOTS

| | CR-3 ZONE REQUIREMENTS | CR-3 P.A.D. REQUESTED |
|---|---|---|
| MAX BUILDING HEIGHT | 30 FEET | 30 FEET |
| MIN LOT AREA | 7,000 SF | 5,000 SF |
| MIN LOT WIDTH | 60 FEET | 50 FEET |
| MIN FRONT YARD | 20 FEET | *20 FEET |
| MIN SIDE YARD | 8 FEET | 5 FEET |
| MIN REAR YARD | 25 FEET | **15 FEET |
| MIN DIST BETWEEN BLDGS | 16 FEET | 10 FEET |
| BUILDABLE AREA | 40% | 64% |

* 10' TO SIDE ENTRY GARAGE OR LIVABLE SPACE
** 10' TO ONE STORY DWELLING

## SHEET INDEX

1 - COVER SHEET
2 - PLAN SHEET

## LEGEND

| | |
|---|---|
| ○ | PROPOSED SANITARY SEWER MANHOLE |
| ⊗ | PROPOSED FIRE HYDRANT |
| PUE | PUBLIC UTILITY EASEMENT |
| BSL | BUILDING SETBACK LINE |
| W | WATER LINE |
| S | SEWER LINE |
| → | STREET DRAINAGE DIRECTION |
| ⊥ | HIGH POINT |
| ⊥ | LOW POINT |

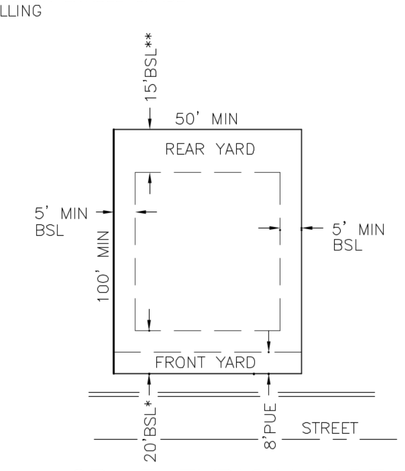


## CR-3 TYPICAL LOT

**5,000 S.F. MINIMUM N.T.S.**
*10 FEET TO SIDE ENTRY GARAGE OR LIVABLE SPACE
** 10' TO ONE STORY DWELLING

## NOTES

1. OPEN SPACE, DRAINAGE, LANDSCAPE, LANDSCAPING IN PUBLIC RIGHTS-OF-WAY, AND RETENTION AREAS TO BE MAINTAINED BY THE HOMEOWNERS ASSOCIATION.
2. ALL INTERIOR STREETS TO BE PUBLIC STREETS.
3. ALL PROPOSED DWELLING UNITS SHALL BE SINGLE FAMILY, DETACHED.
4. DROUGHT-TOLERANT, DESERT VEGETATION SHALL BE UTILIZED FOR LANDSCAPING IN OPEN SPACES AND ARE TO BE MAINTAINED BY THE HOMEOWNERS ASSOCIATION.
5. APPROVED STREET ADDRESSES WILL BE ON FILE AT THE PINAL COUNTY PLANNING AND DEVELOPMENT SERVICES DEPARTMENT.
6. A 1/2" CAPPED REBAR WILL BE SET AT ALL LOT AND TRACT CORNERS UPON COMPLETION OF PAVING IMPROVEMENTS.
7. A THREE INCH BRASS SURVEY MONUMENT TO BE SET IN CONCRETE AT ALL CENTERLINE P.C., P.T. AND STREET INTERSECTIONS UPON COMPLETION OF PAVING IMPROVEMENTS.
8. LOTS & TRACTS SHALL BE SUBJECT TO COVENANTS, CONDITIONS, RESTRICTIONS, ASSESSMENTS, CHARGES, SERVITUDES, LIENS, RESERVATIONS AND EASEMENTS FOR NEVITT FARMS.
9. ALL NEW OR RELOCATED UTILITIES SHALL BE PLACED UNDERGROUND.

## NUMBER OF LOTS

| | |
|---|---|
| NUMBER OF 50' X 100' LOTS | 96 |
| NUMBER OF 55' X 100' LOTS | 1 |
| NUMBER OF 60' X 100' LOTS | 1 |
| NUMBER OF 50' X 105' LOTS | 10 |
| NUMBER OF 55' X 105' LOTS | 38 |
| NUMBER OF 60' X 105' LOTS | 44 |
| NUMBER OF 50' X 110' LOTS | 6 |
| NUMBER OF 55' X 110' LOTS | 5 |
| NUMBER OF 60' X 110' LOTS | 19 |
| NUMBER OF 65' X 110' LOTS | 3 |
| NUMBER OF 50' X 120' LOTS | 10 |
| NUMBER OF 60' X 120' LOTS | 23 |
| TOTAL NUMBER OF LOTS | 256 |

## UTILITY SERVICES

| | |
|---|---|
| SEWER | GLOBAL WATER RESOURCES |
| WATER | GLOBAL WATER RESOURCES |
| ELECTRICITY | ELECTRICITY DISTRICT #3 |
| TELEPHONE | QWEST COMMUNICATIONS |
| GAS | SOUTHWEST GAS CORPORATION |
| POLICE | PINAL COUNTY SHERIFF'S OFFICE |
| FIRE | REGIONAL FIRE AND RESCUE DPT. |
| SCHOOLS | FLORENCE UNIFIED SCHOOL DISTRICT |
| SOLID WASTE | WASTE MANAGEMENT |

## ROADWAYS

| STREET TYPE | TRACT WIDTH | PAVED WIDTH |
|---|---|---|
| INTERIOR (PUBLIC STREET) | 50' | 32' (B/C TO B/C) |
| INTERIOR MAJOR COLLECTOR (PUBLIC STREET) | 80' | 51' (B/C TO B/C) |
| INTERIOR MAJOR COLLECTOR (PUBLIC STREET) | 100' | 51' (B/C TO B/C) |
| BARNES RD. (ARTERIAL) | 55' R/W HALF STREET | 37.5' (CL TO B/C) |

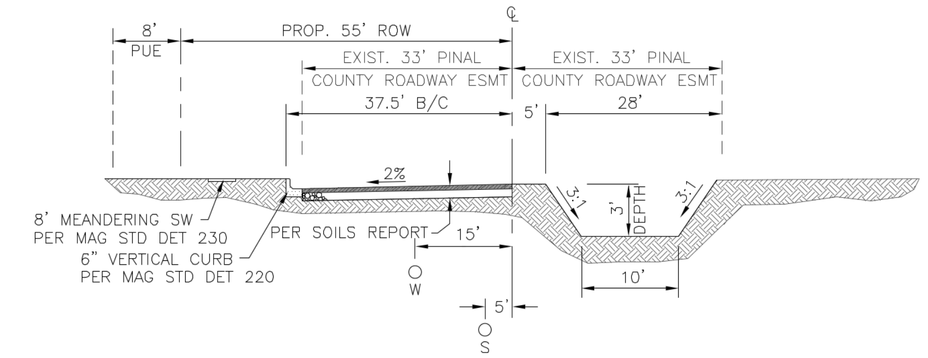


## BARNES ROAD SECTION

SECTION-A LOOKING EAST
N.T.S.

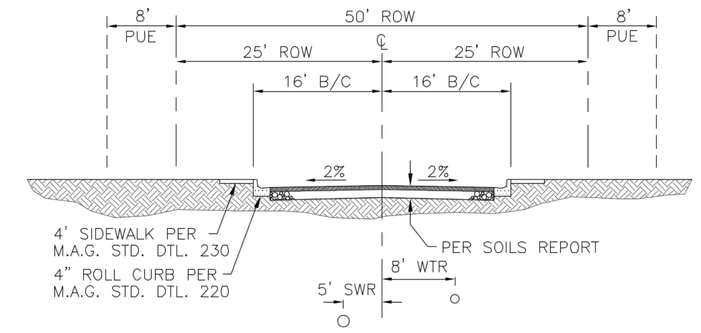


## TYPICAL LOCAL STREET (PUBLIC)

SECTION-B LOOKING NORTH OR EAST
N.T.S.

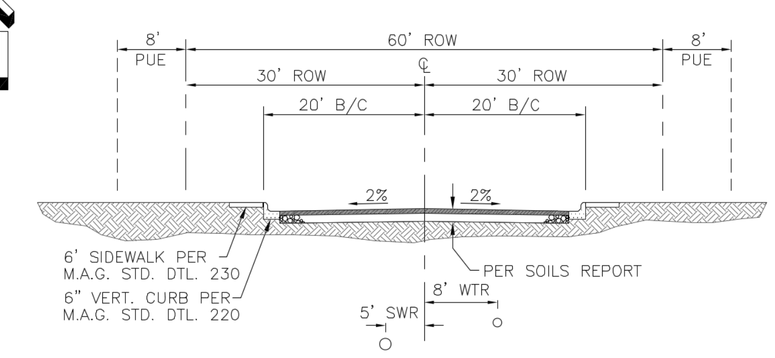


## MINOR COLLECTOR (PUBLIC)

SECTION-C LOOKING NORTH
N.T.S.

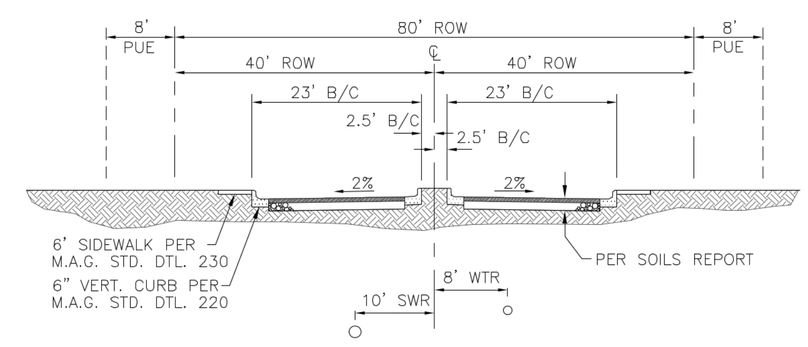


## MODIFIED MINOR COLLECTOR (PUBLIC)

SECTION-D LOOKING NORTH
N.T.S.

Two working days before you dig
CALL FOR THE BLUE STAKES
263-1100
1-800-STAKE-IT
OUTSIDE MARICOPA COUNTY


FETTER ENGINEERING GROUP
5345 E. McLellan Rd. Suite 100
Mesa, AZ 85205
P 480-220-5379
F 480-558-0779


| NO. | REVISION | BY | DATE |
|---|---|---|---|
| | | | |

THIS DRAWING IS NOT TO BE USED FOR CONSTRUCTION PURPOSES UNTIL SEALED AND SIGNED BY CM FETTER, LLC, OR DESIGNATED CONSULTANTS. DRAWINGS ARE COPY WRITTEN BY CM FETTER, LLC. ANY REPRODUCTION OR REUSE WITHOUT WRITTEN PERMISSION IS STRICTLY PROHIBITED ©

**TENTATIVE PLAT**
**KINO TRAILS**
**PINAL COUNTY, ARIZONA**

| | |
|---|---|
| DATE | 11-15-07 |
| DRAWN BY | PDJ |
| DESIGNED BY | CMF |
| PROJECT # | 07-022 |
| FILENAME | 07-022-Tent Plat |

SEAL

Registered Professional Engineer (Civil) CERTIFICATE NO. 38509 ARIZONA U.S.A.
NOT FOR CONSTRUCTION

**SHEET: 1**
**OF: 2**